CAMPANE PER DISERBO LOCALIZZATO
BELLS FOR LOCALIZED WEED-REMOVAL
CAMPANAS PARA DESHERBADO LOCALIZADO

COD.	
5320	*12 x 19*

Dim. *(mm)*		
Ø	h	h totale total h h total
220	*160*	*190*

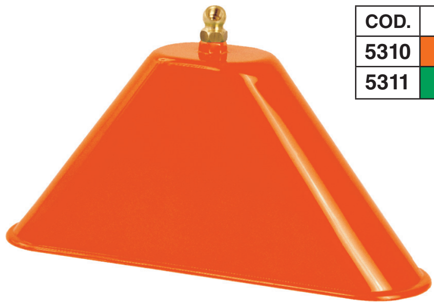

COD.	Colore / Colour / Color	
5310	Arancione / Orange / Naranja	*12 x 19*
5311	Verde / Green / Verde	

Dim. *(mm)*			
A	B	h	h totale total h h total
350	*120*	*170*	*200*

COD.	
5310.305	*12 x 19*
5310.310	*1/4"*

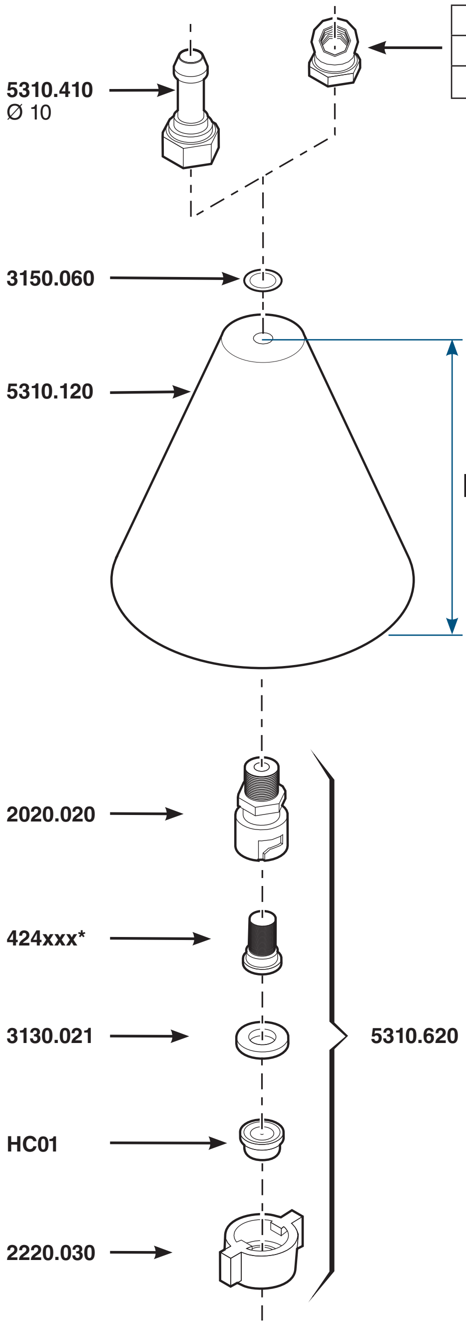

COD.	
5310.305	*12 x 19*
5310.310	*1/4"*

COD.	Colore / Colour / Color
5310.110	Arancione / Orange / Naranja
5311.110	Verde / Green / Verde

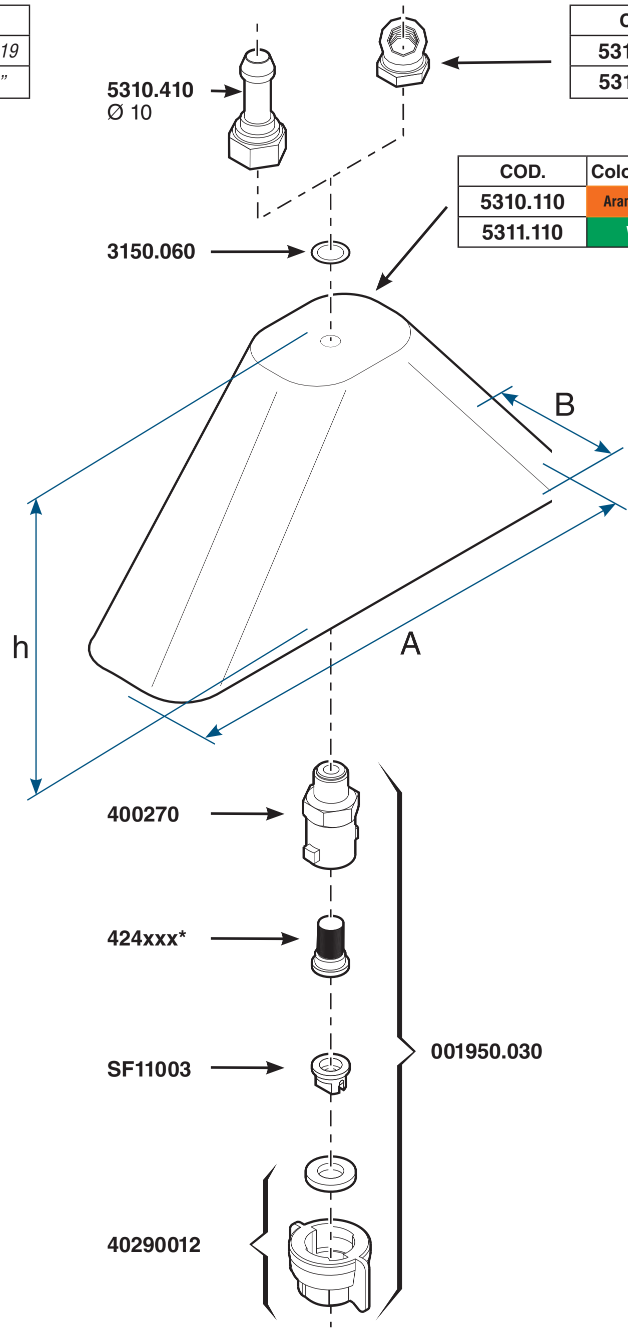

** Non compresi (Pagina 116)*
** Not included (Page 116)*
** No incluidos (Pág 116)*